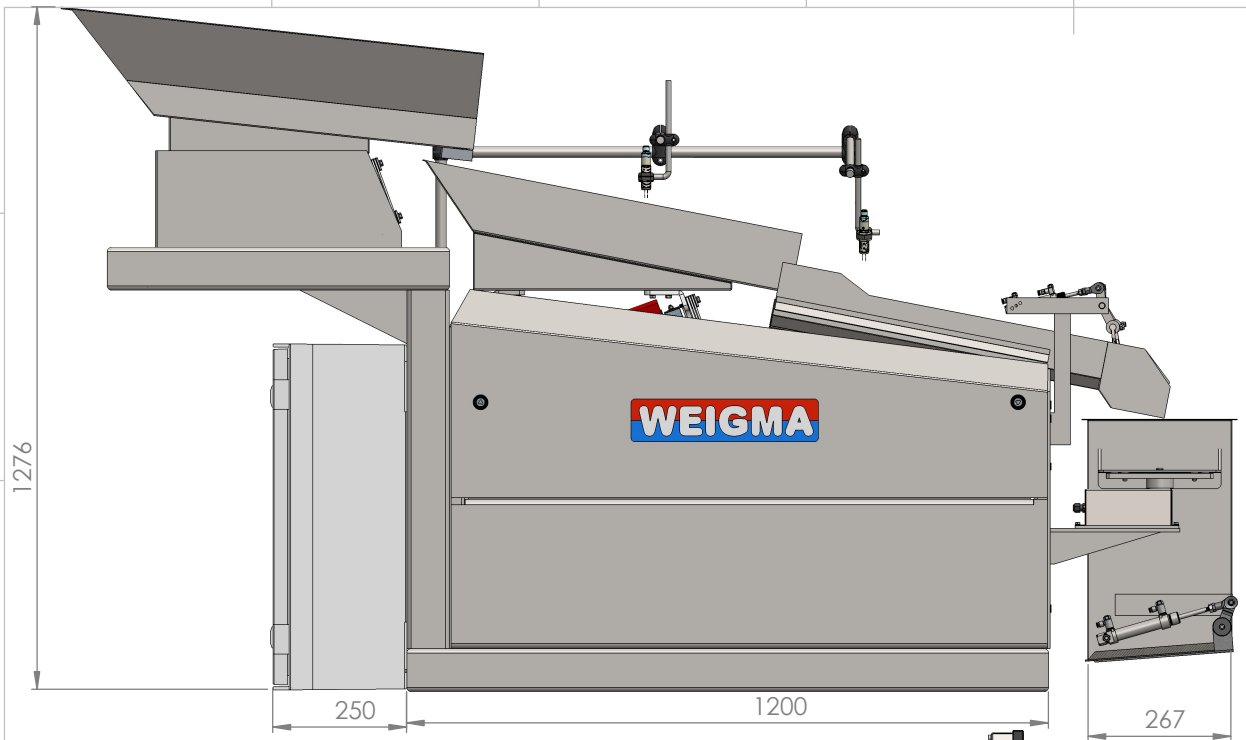

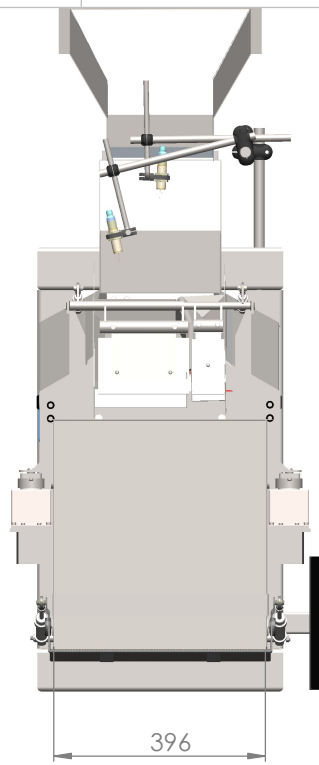

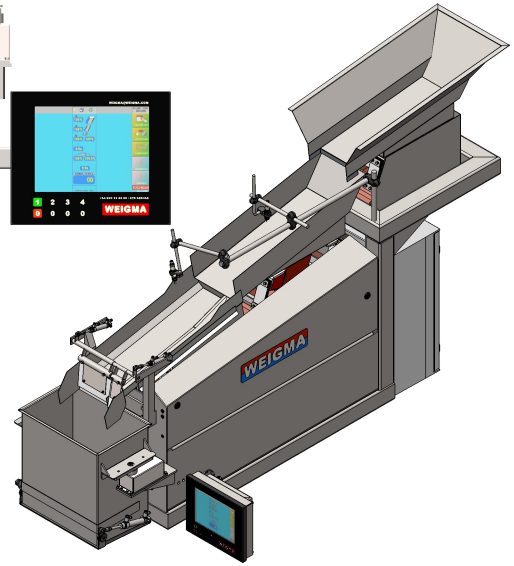

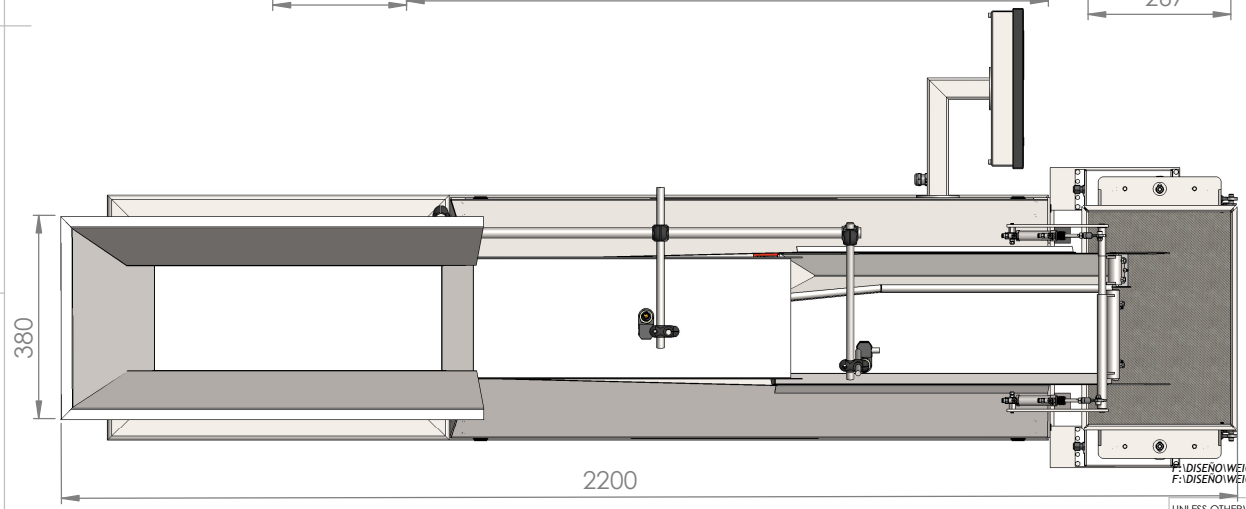

F:\DISENO\WEIGMA\WEG3\WEG30000 3 NIVELES MONO\WEG30000 3 NIVELES MONO PESADORA LINEAL SIN PATAS WEIGMAPredeterminado
F:\DISENO\WEIGMA\WEG3\WEG30000 3 NIVELES MONO\WEG30000 3 NIVELES MONO PESADORA LINEAL SIN PATAS WEIGMA

UNLESS OTHERWISE SPECIFIED:
DIMENSIONS ARE IN MILLIMETERS
SURFACE FINISH:
TOLERANCES:
LINEAR:
ANGULAR:

FINISH:

DEBUR AND BREAK SHARP EDGES

CODE:

REVISION

WEIGMA ®

	NAME	SIGNATURE	DATE
DRAWN			
CHK'D			
APPV'D			
MFG			
Q.A			

TITLE:

MATERIAL:

WEIGHT:

DWG NO. WEG30000 3 NIVELES MONO PESADORA LINEAL SIN PATAS WEIGMA

A3

SCALE:1:20

SHEET 1 OF 1